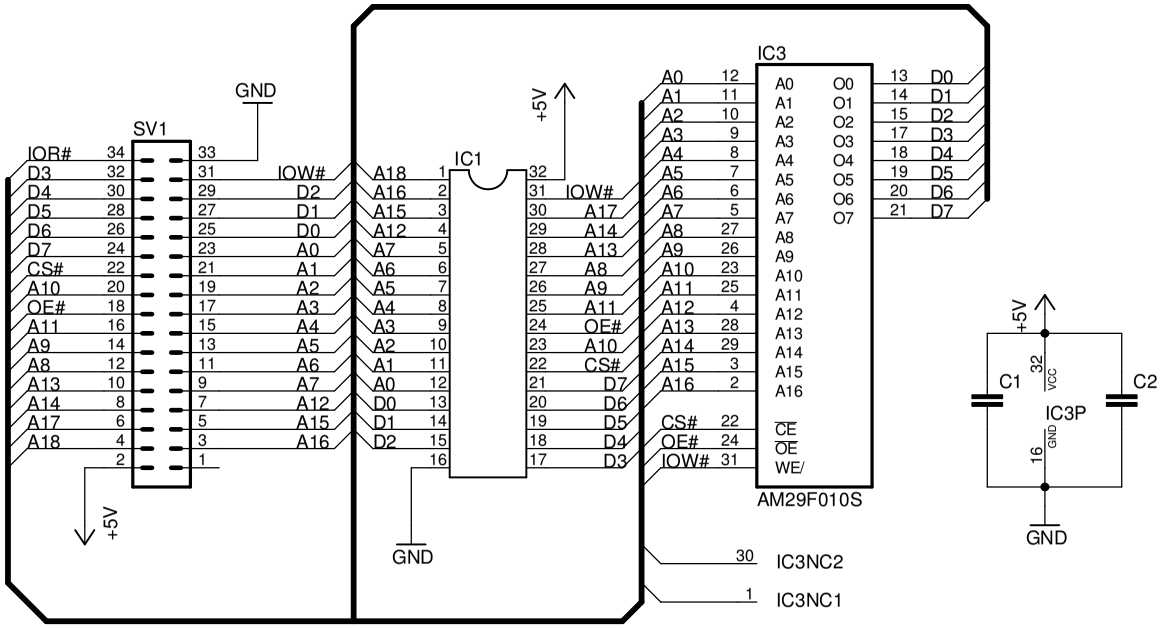


This work is free software; you can redistribute it and/or modify it under the terms of the GNU General Public License as published by the Free Software Foundation; either version 2 of the License, or any later version. This work is distributed in the hope that it will be useful, but WITHOUT ANY WARRANTY; without even the implied warranty of MERCHANTABILITY or FITNESS FOR A PARTICULAR PURPOSE. See the GNU General Public License for more details.

Nokia IP530 flashrom option board

pe2mbs@yahoo.co.uk

TITLE: rom-option-board

Document Number:

REV:

Date: 1/7/11 11:30 AM

Sheet: 1/1